KLEIN®

Instrucciones / Instructions / Anweisungen / Instructions

UNIKAIRSELF® 10-12 mm

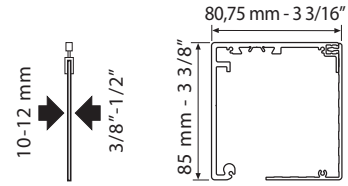

KLEIN EUROPE
Edificio KLEIN
Polígono Industrial Can Cuyás, N-150 Km.1
08110 Montcada i Reixac (Barcelona-Spain)
Tel.: (+34) 935 751 010
Fax: (+34) 935 760 109

+INFO
www.klein-europe.com

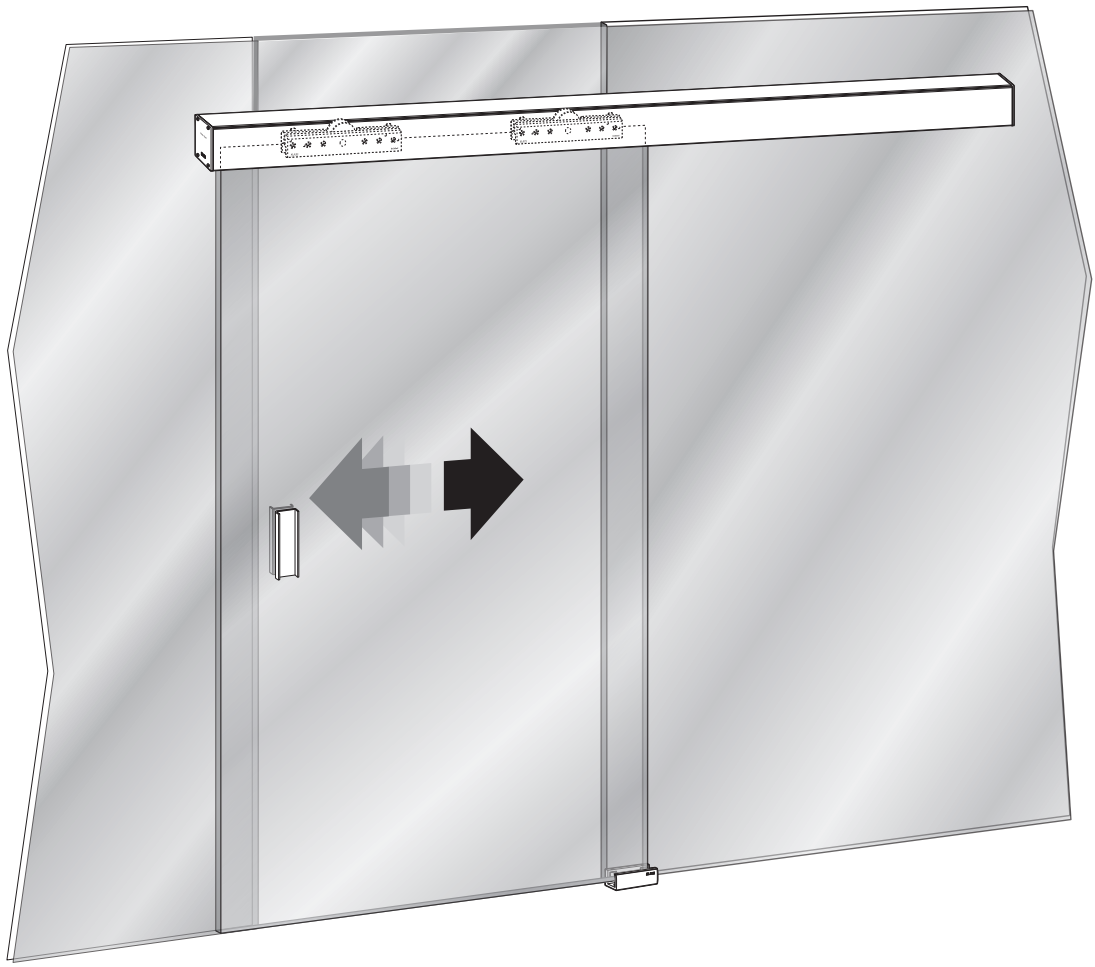

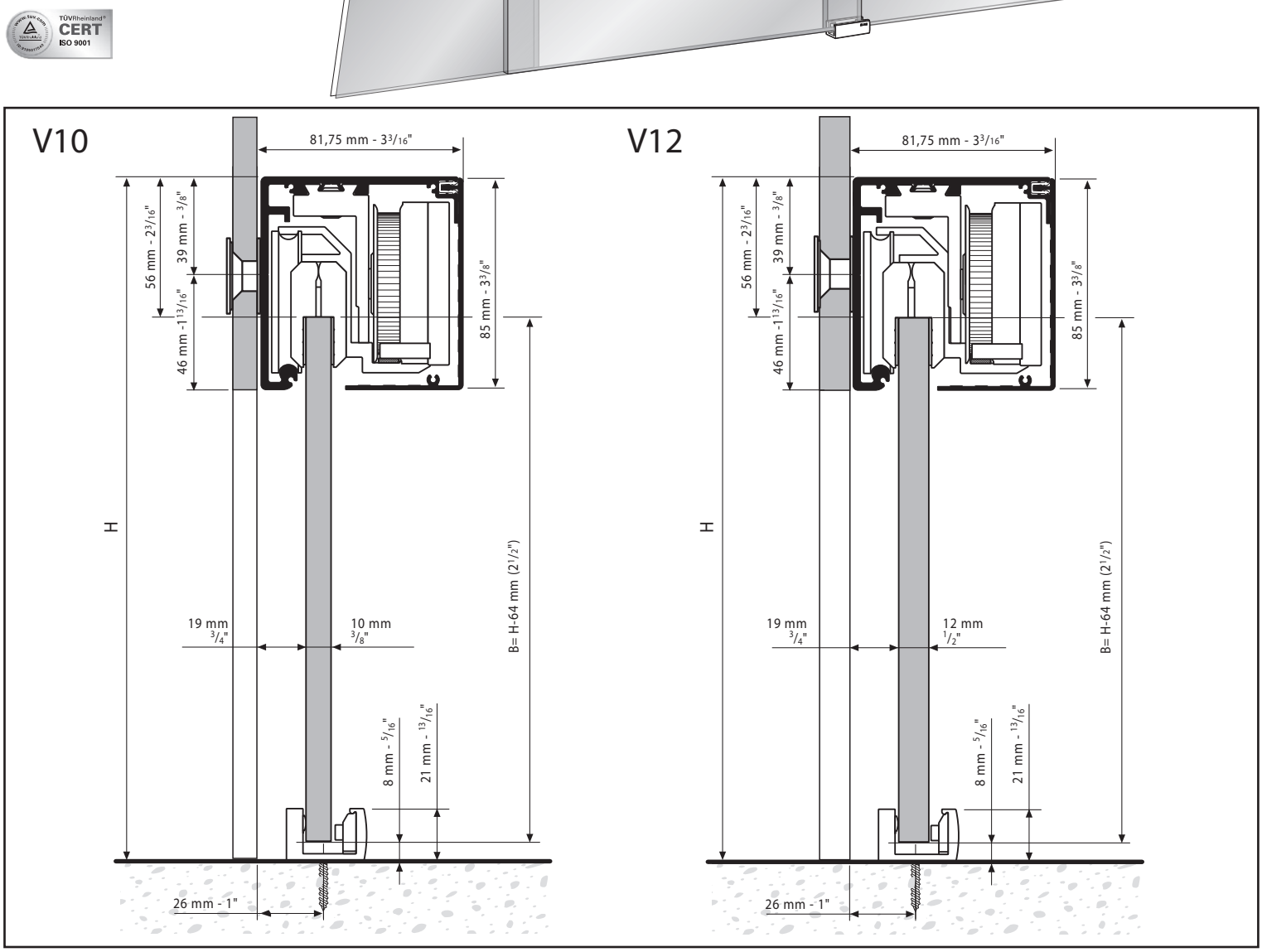

411-2655 02-22 PK19

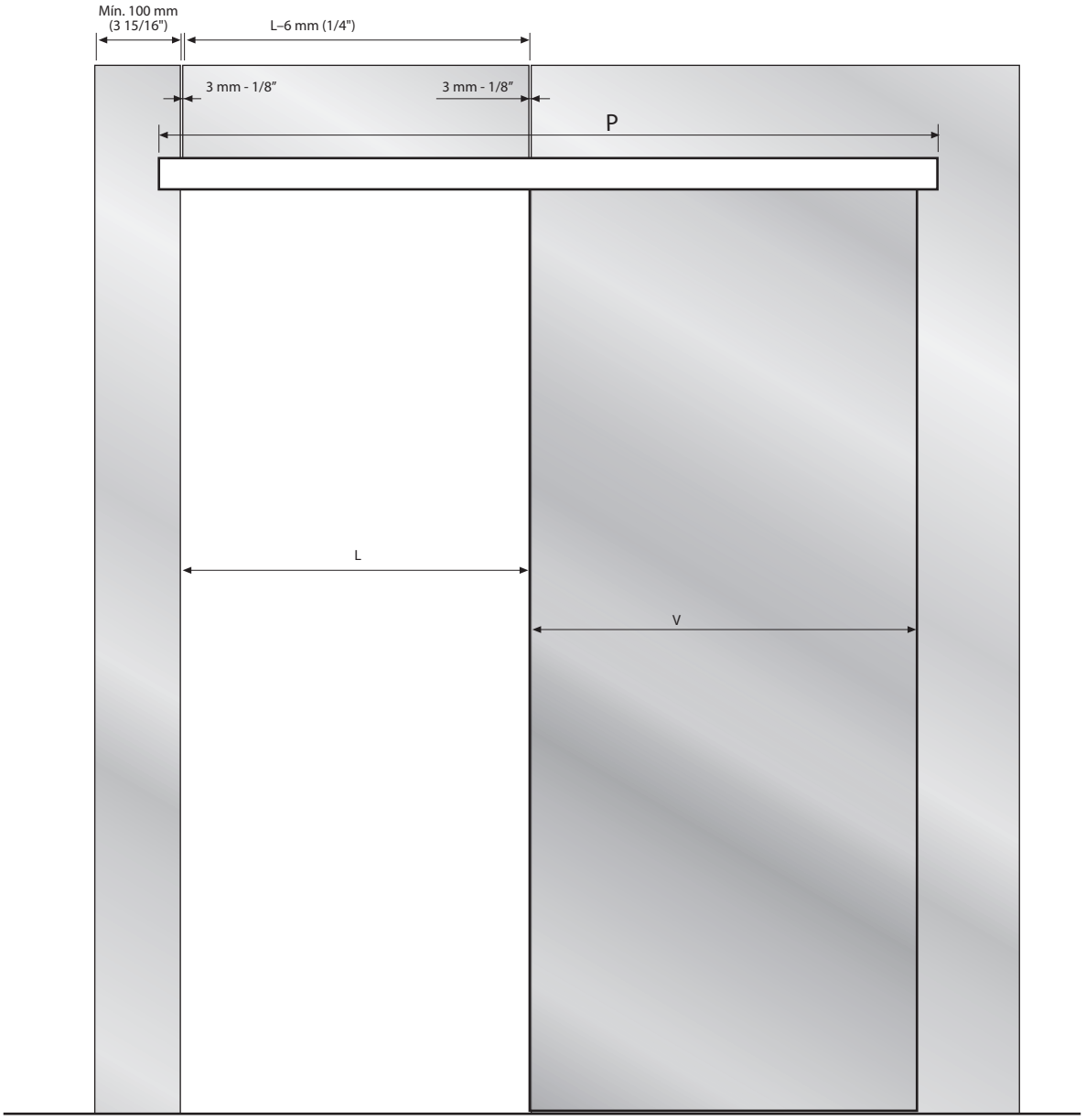

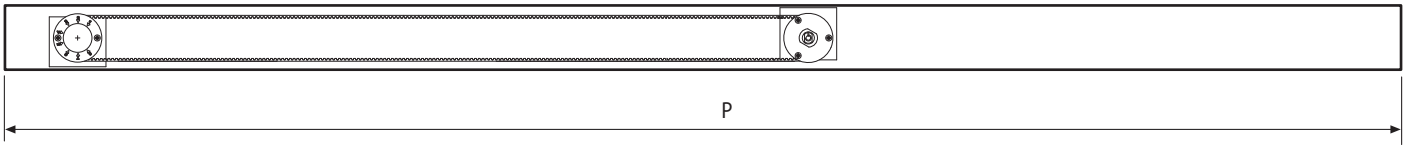

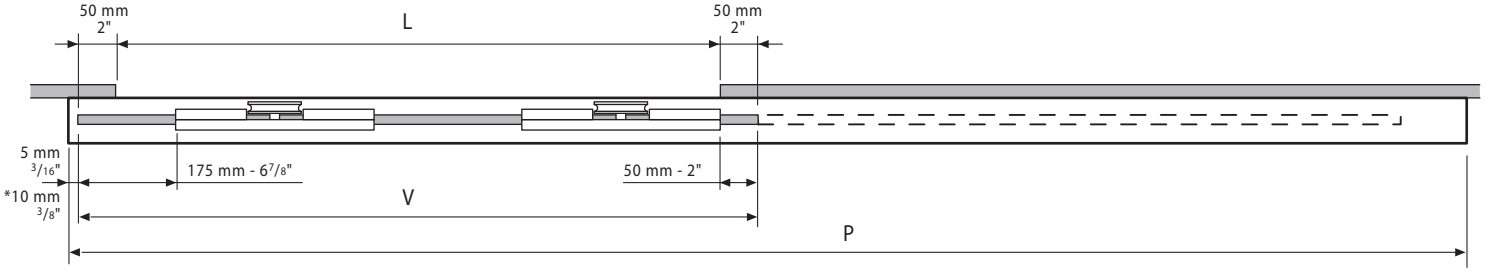

	L	V	P
G1 V10 - V12	900 mm 35 1/2"	1.000 mm 39 1/2"	2.000 mm 78"
G2 V10 - V12	1.150 mm 45"	1.250 mm 49"	2.500 mm 98"
G3 V10*	1.400 mm 55"	1.500 mm 59"	3.000 mm 118"

	B			
	V10		V12	
V	max	min	max	min
1.000 mm 39 1/2"	3.000 mm 118"	2.200 mm 87"	3.000 mm 118"	1.830 mm 72"
1.250 mm 49"	2.900 mm 114"	1.760 mm 69"	2.400 mm 94"	1.470 mm 69"
1.500 mm 59"	2.400 mm 94"	1.470 mm 58"	2.000 mm 78"	1.220 mm 48"

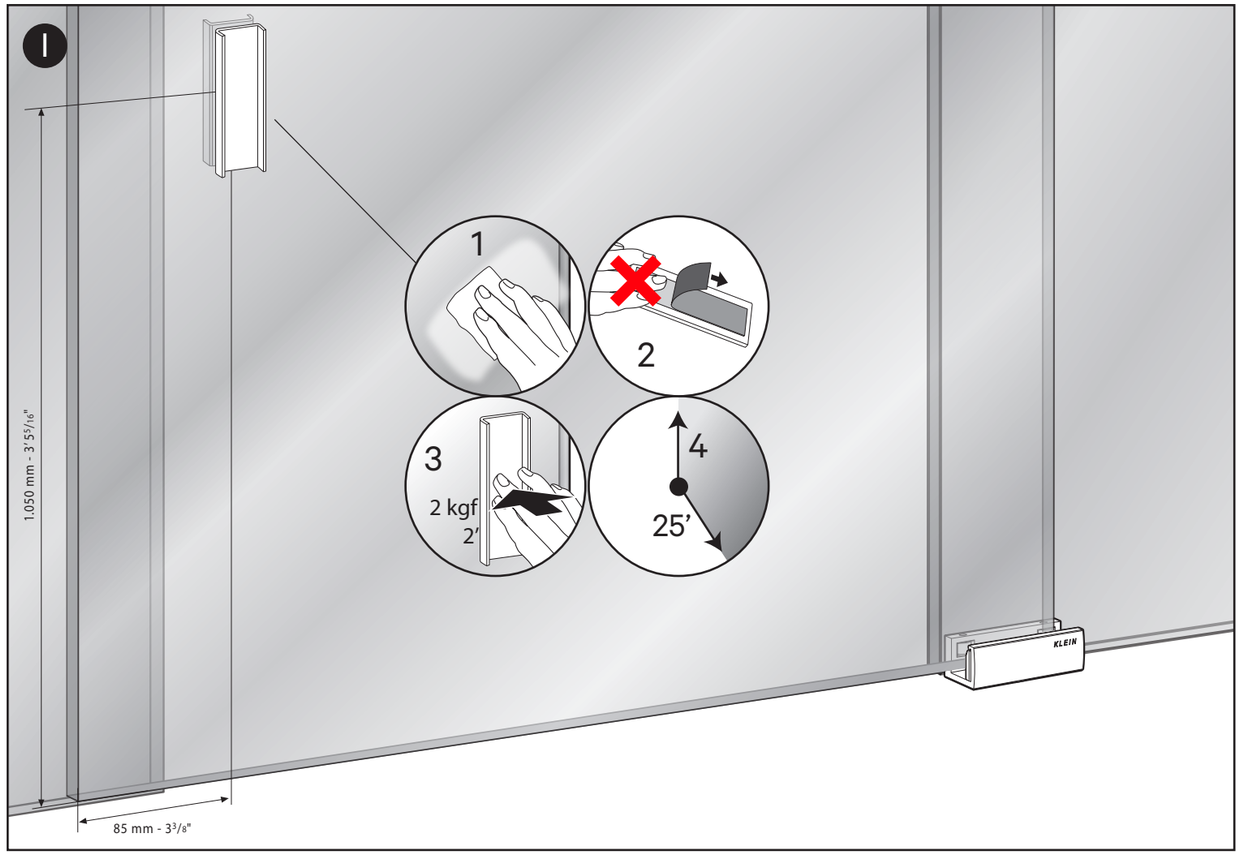

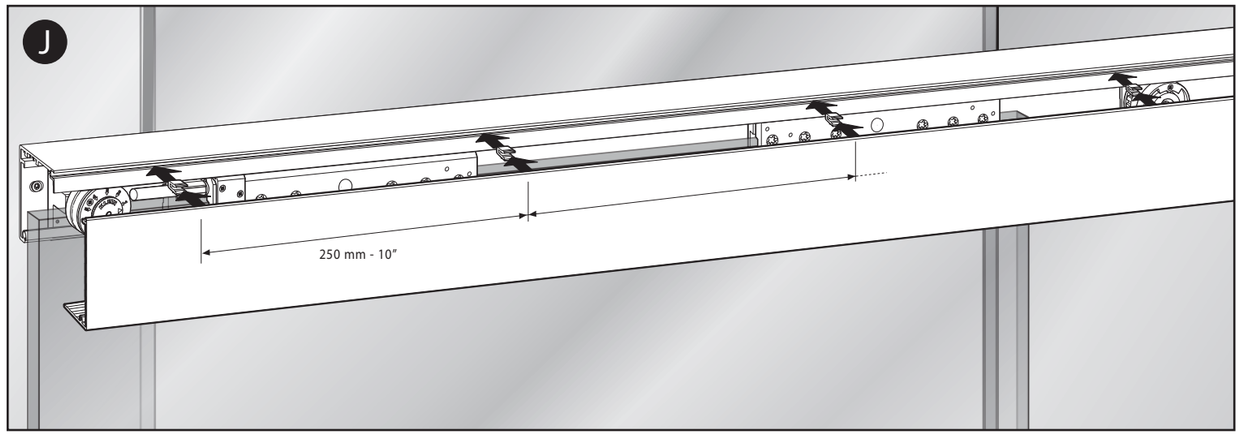

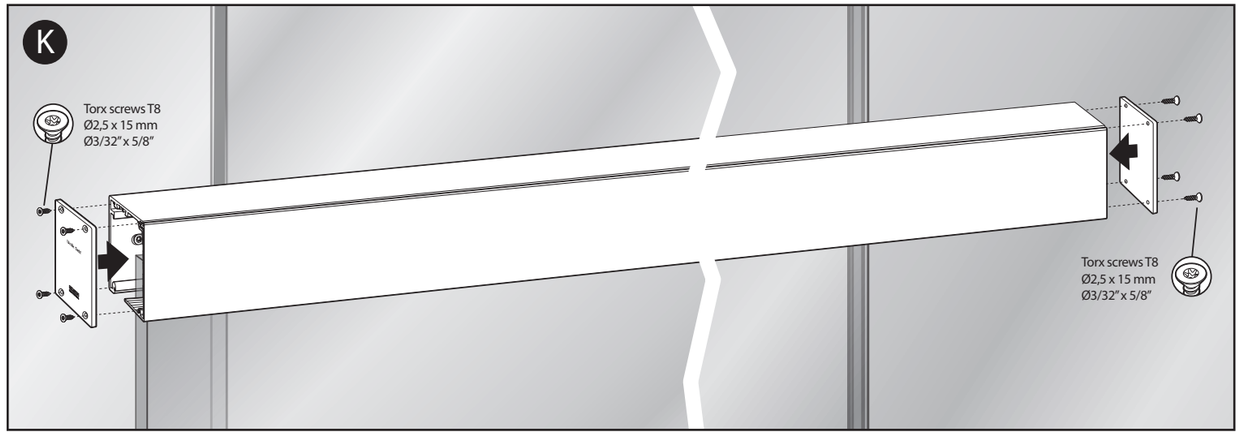

P = 2.000 mm (6' 3 3/4")

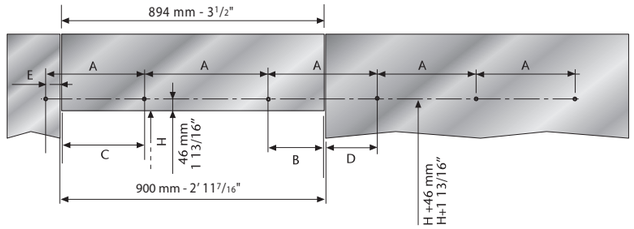

	mm	"
A	390	1'3 3/8"
B	147	5 13/16"
C	357	1'2 1/16"
D	240	9 7/16"
E	30	1 3/16"

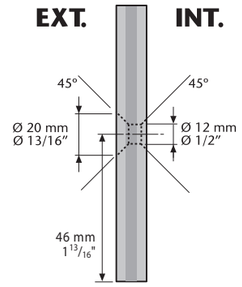

P = 2.500 mm (8' 2 7/16")

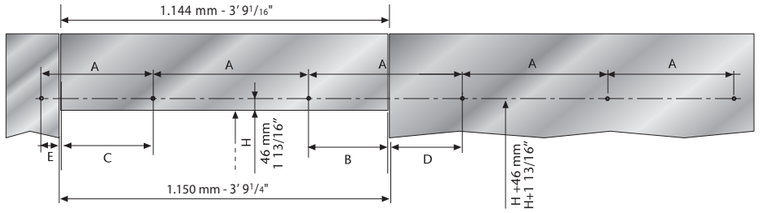

	mm	"
A	490	1'7 5/16"
B	197	7 3/4"
C	457	1'6"
D	290	11 7/16"
E	30	1 3/16"

P = 3.000 mm (9' 10 1/8")

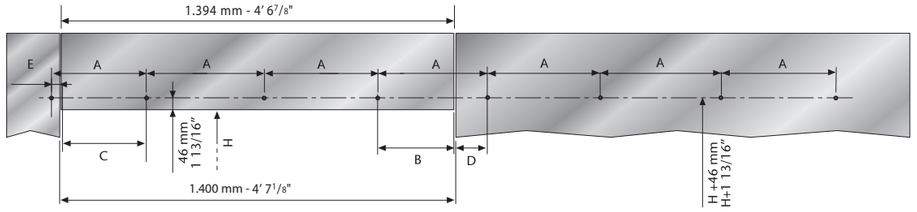

	mm	"
A	420	1'4 9/16"
B	167	6 9/16"
C	387	1'3 1/4"
D	240	9 7/16"
E	30	1 3/16"

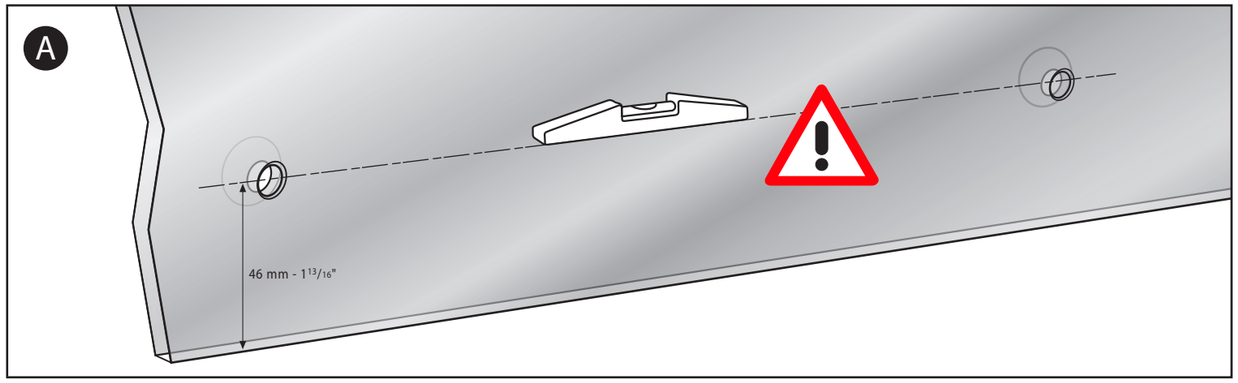

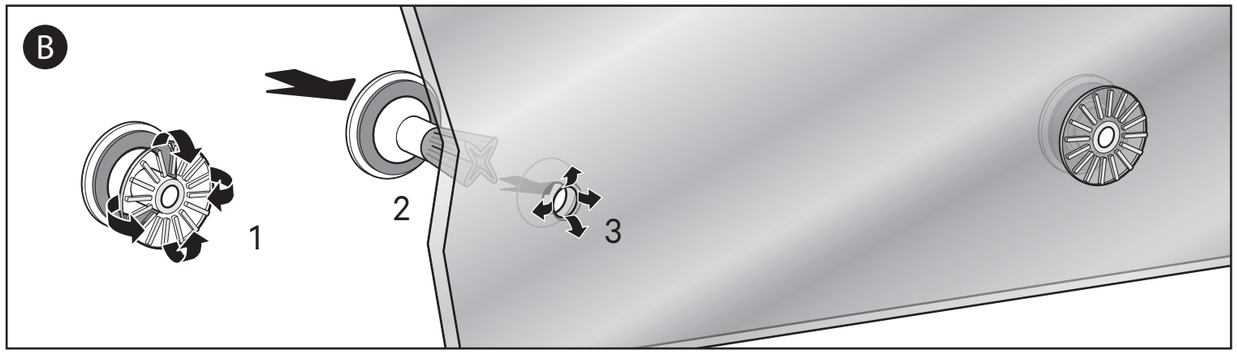

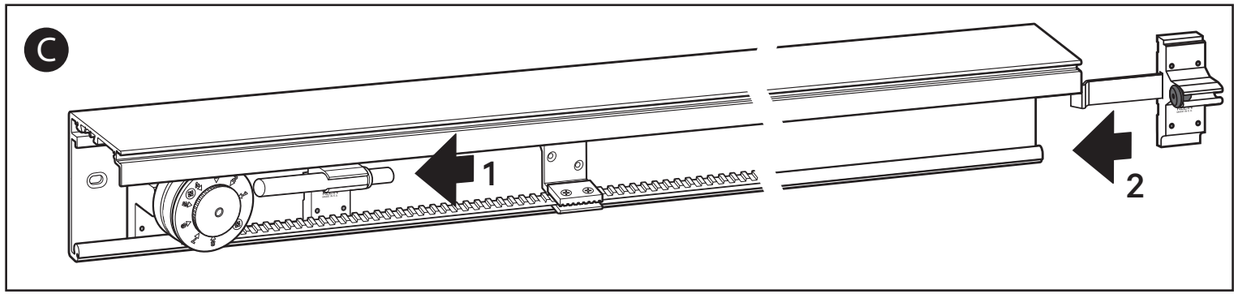
C
1
2

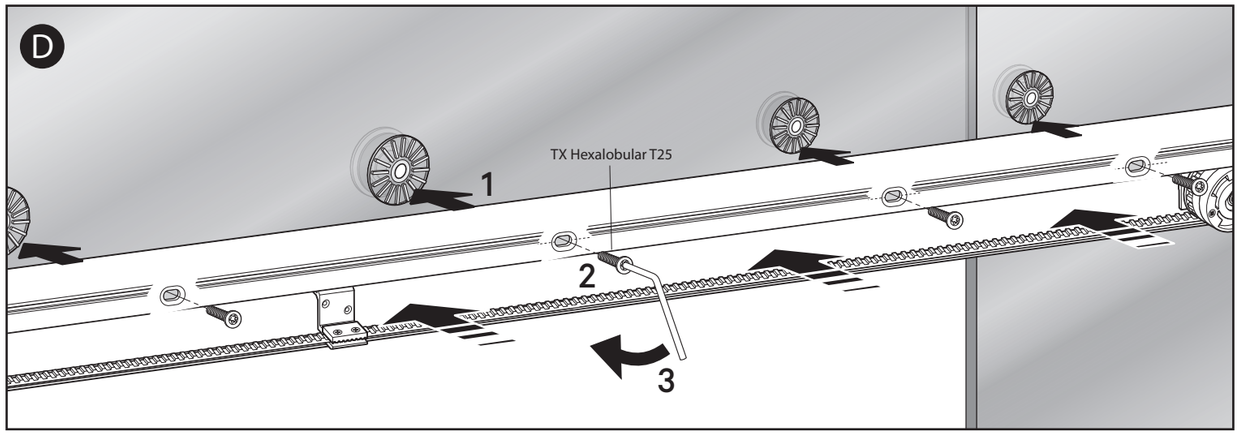
D
TX Hexalobular T25
1
2
3

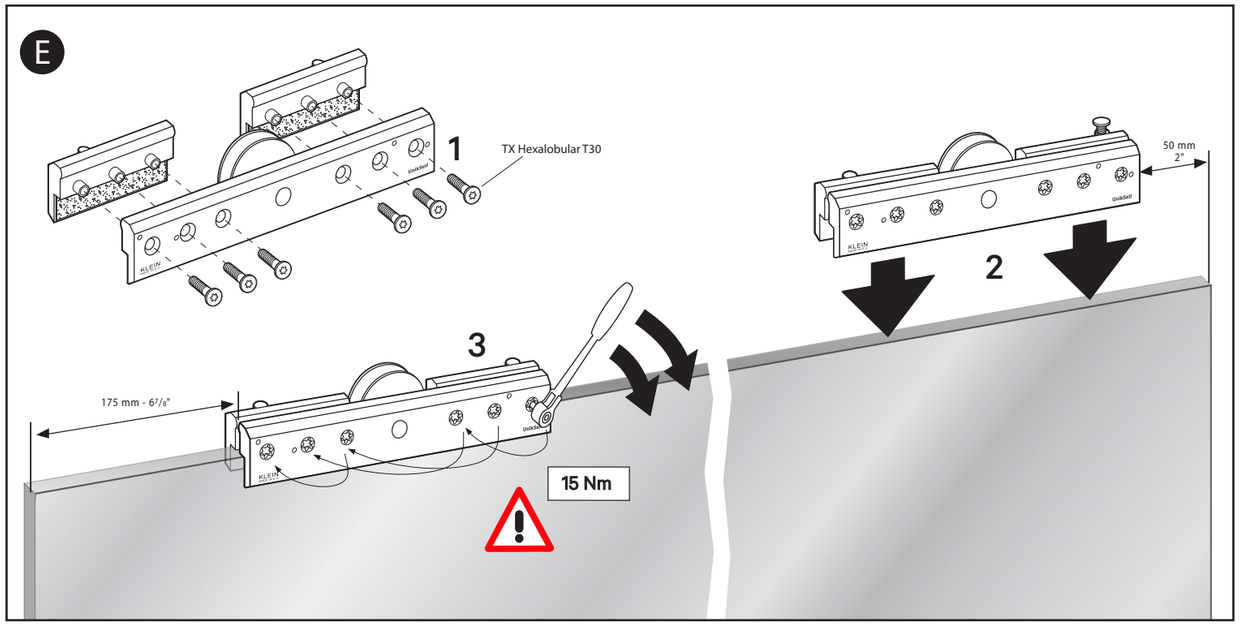
E
1
TX Hexalobular T30
50 mm
2"
2
3
175 mm - 6 7/8"
15 Nm

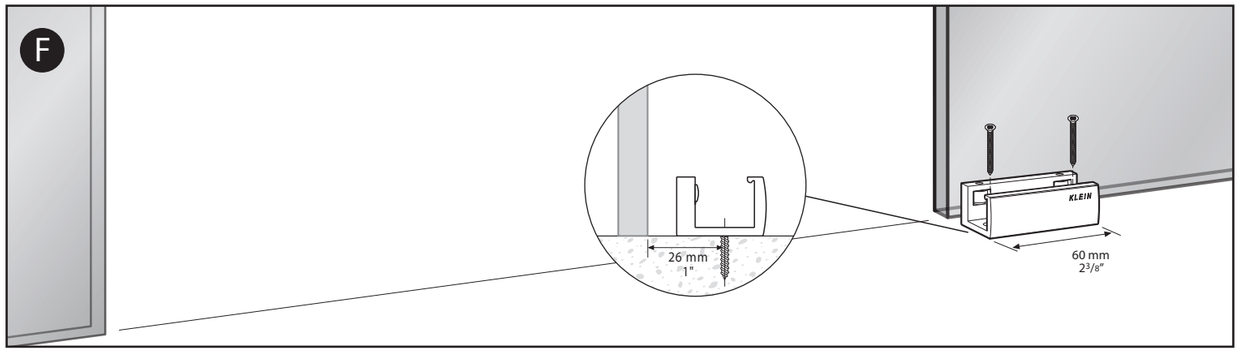
F
26 mm
1"
60 mm
2 3/8"

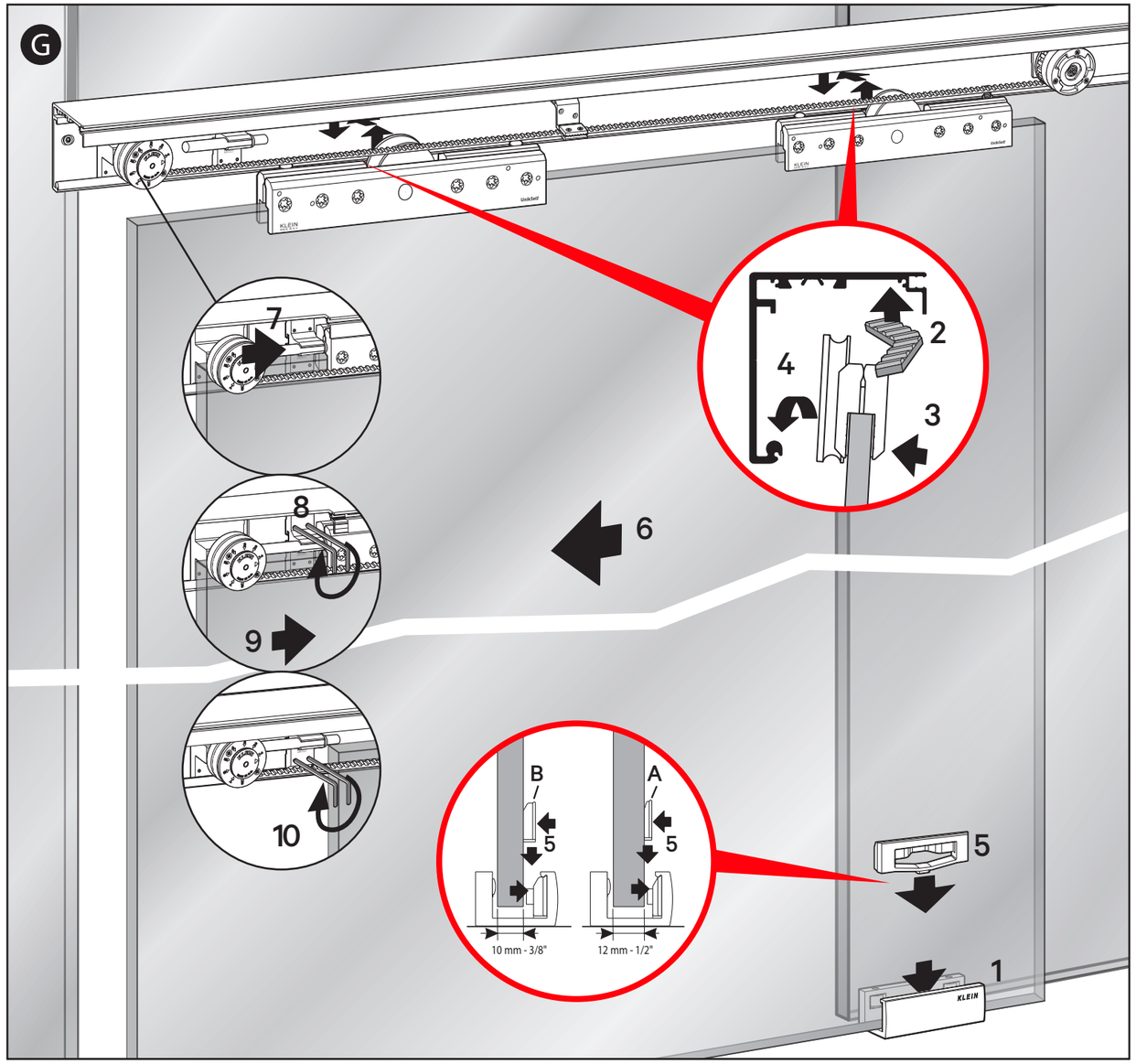
G
7
8
9
10
6
2
4
3
B
A
5
5
10 mm - 3/8"
12 mm - 1/2"
5
1

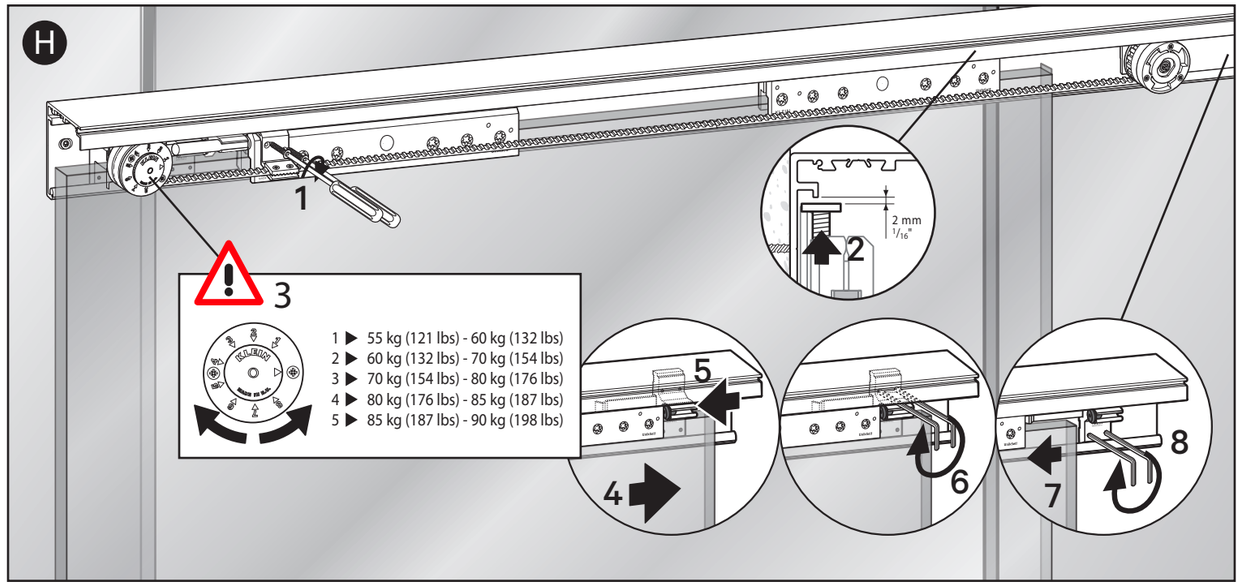
H
1
2
2 mm
1/16"
3
1 ▶ 55 kg (121 lbs) - 60 kg (132 lbs)
2 ▶ 60 kg (132 lbs) - 70 kg (154 lbs)
3 ▶ 70 kg (154 lbs) - 80 kg (176 lbs)
4 ▶ 80 kg (176 lbs) - 85 kg (187 lbs)
5 ▶ 85 kg (187 lbs) - 90 kg (198 lbs)
5
4
6
7
8